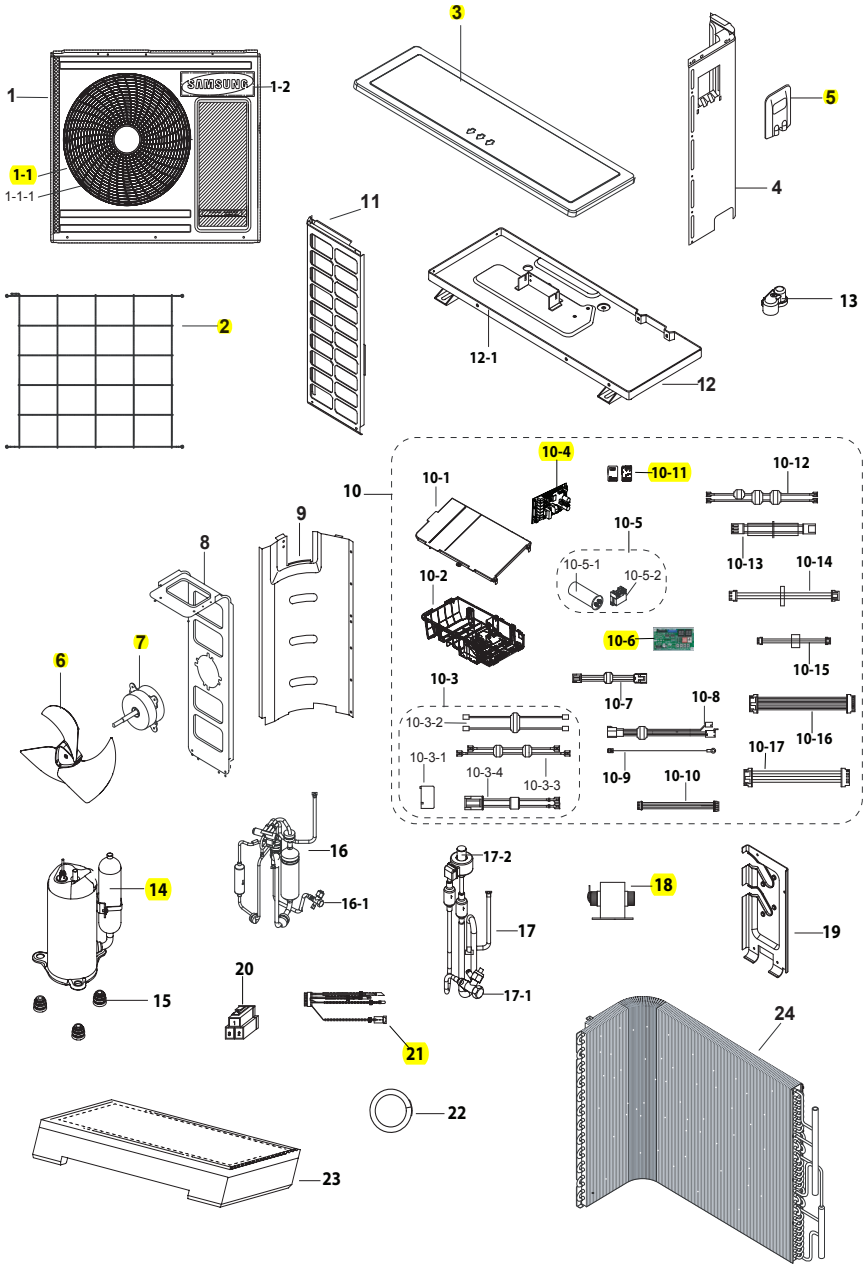Outdoor Unit : AC060HCADKH/EU AC071HCADKH/EU