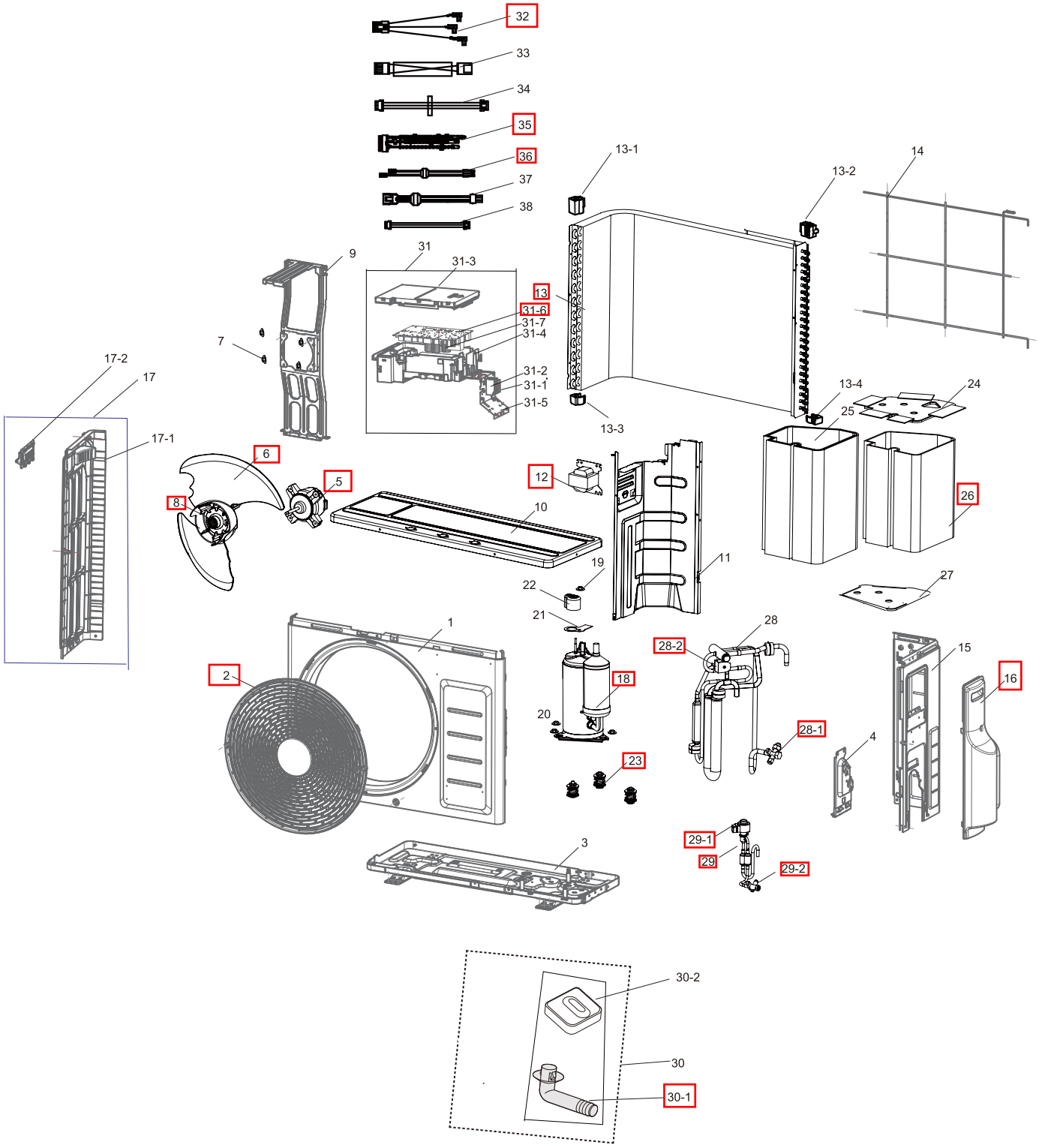■OUTDOOR UNIT