# 5. Exploded Views and Parts List

## 5-1 Indoor Unit
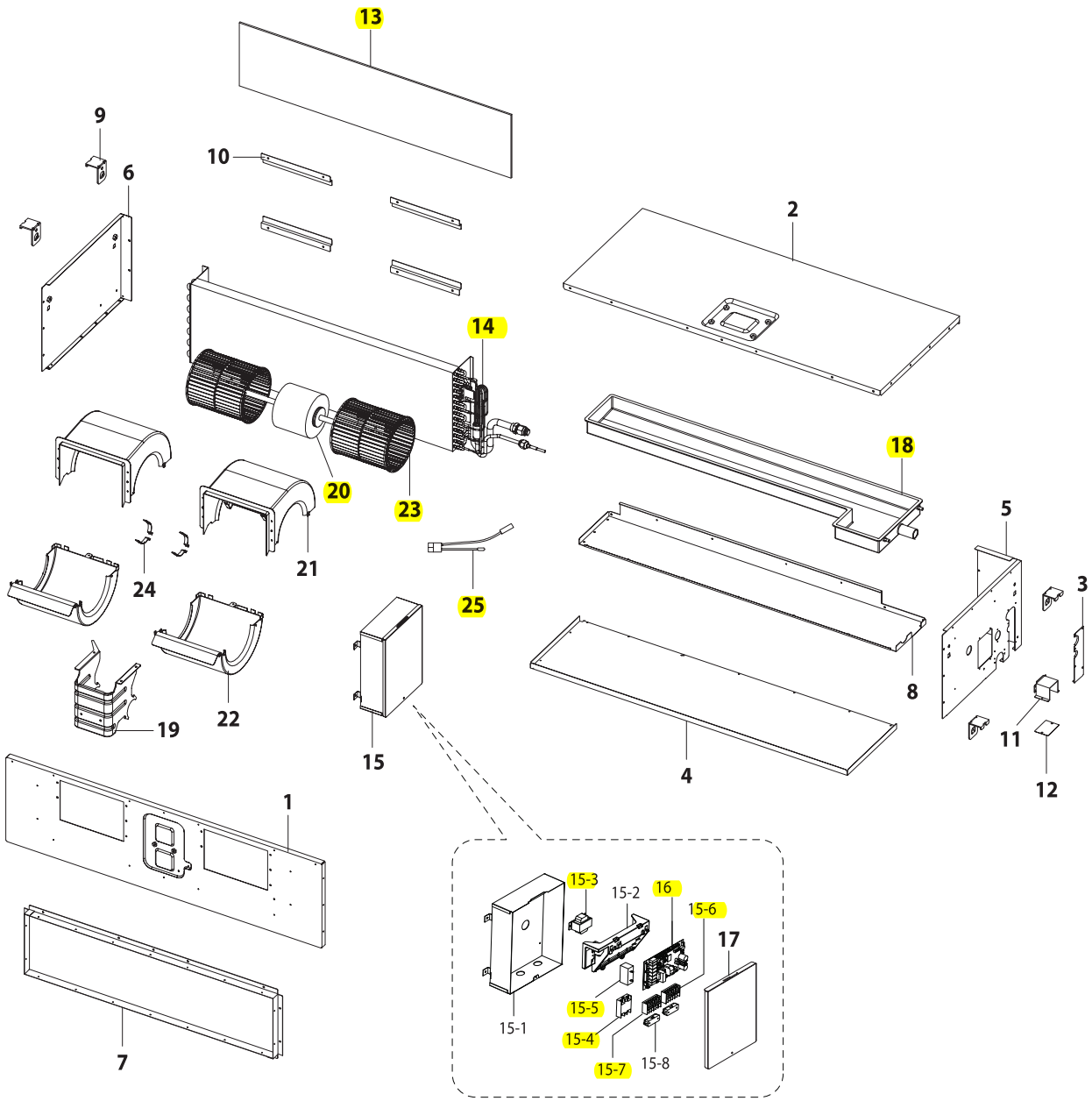
■DH105EAV